ACCESSORIES					
MK	SIZE	DESCRIPTION	DEG	ELEV	DOME

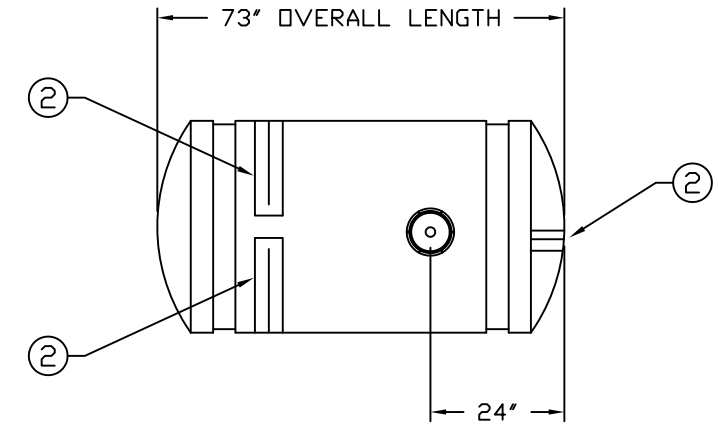

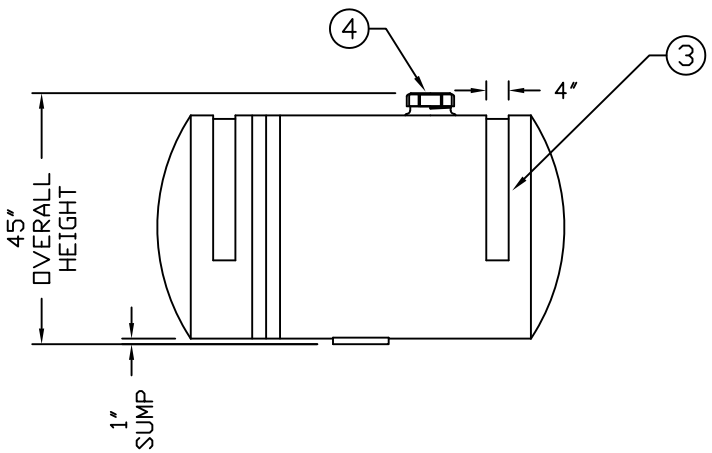

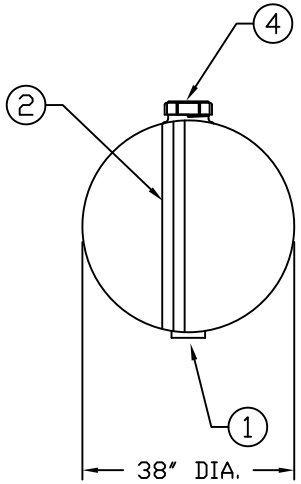

NOTES:

1. 10″ X 5 1/2″ X 1″ DEEP SUMP
2. MOLDED VOLUME MARKER (3 PLACES)
3. MOLDED IN BANDING GROOVES (2 PLACES)
4. 7″ THREADED LID & RIM

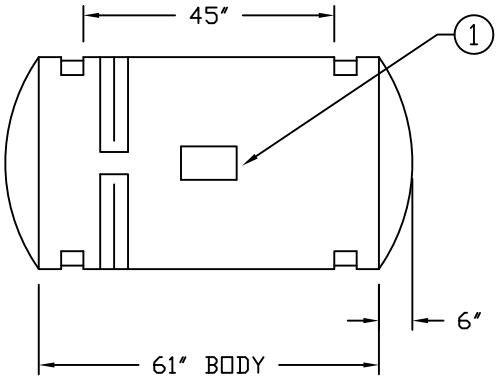

REV	REVISION DESCRIPTION	REV DATE
B	CHANGED LID SIZE FROM 8″ TO 7″ STANDARD	3/23/26 SH
A	UPDATED TITLE BLOCK	1/9/09 MG

–

Assmann CORPORATION OF AMERICA
300 N TAYLOR ROAD
GARRETT, IN 46738
PHONE: (260) 357-3181
FAX: (260) 357-3738

RESIN USED: – – POLYETHYLENE

TANK DESIGNED SPECIFIC GRAVITY – SP.G. MAX

TANK WEIGHT – LBS.

TANK COLOR –

TITLE IHT 300 GAL. CYLINDRICAL HORIZONTAL STORAGE TANK

DRAWN BY:	DRAWN DATE:	SALES ORDER#
S.HAMILTON	3/23/26	

ASSMANN CORPORATION

ALL DIMENSIONS ARE IN INCHES AND ARE ±3%

DWG NUMBER: IHT 300 REV B